TWF TIEFBAUTECHNIK

Sales | Rental | Leasing

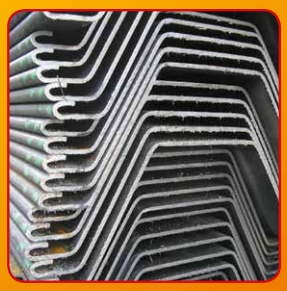

TRENCH SHORING SYSTEMS

www.twf.at

TWF TIEFBAUTECHNIK

Sales | Rental | Leasing

▶ Trench Shoring Systems - Overview

PLACE AND ADJUST METHOD | **LOWER AND CUT METHOD**

	Type 100 Light Weight Shoring Page 6 - 7	Type 300 Light Box Shoring Page 8 - 9	Type 600 Standard Box Shoring Page 10 - 11	Type 400 Pile Chamber Page 12 - 13	Manhole Box Shoring on request
1m					
2m					
3m	max. 3,00 m				
4m		max. 3,80 m			max. 3,80 m
5m			max. 5,20 m		
6m				max. 6,00 m	
7m					
8m					
9m					
10m	9 - 13 t	Base element **12 - 18 t** with Top element **18 - 30 t**	Base element **12 - 18 t** with Top element **18 - 30 t**	9 - 13 t	18 - 30 t

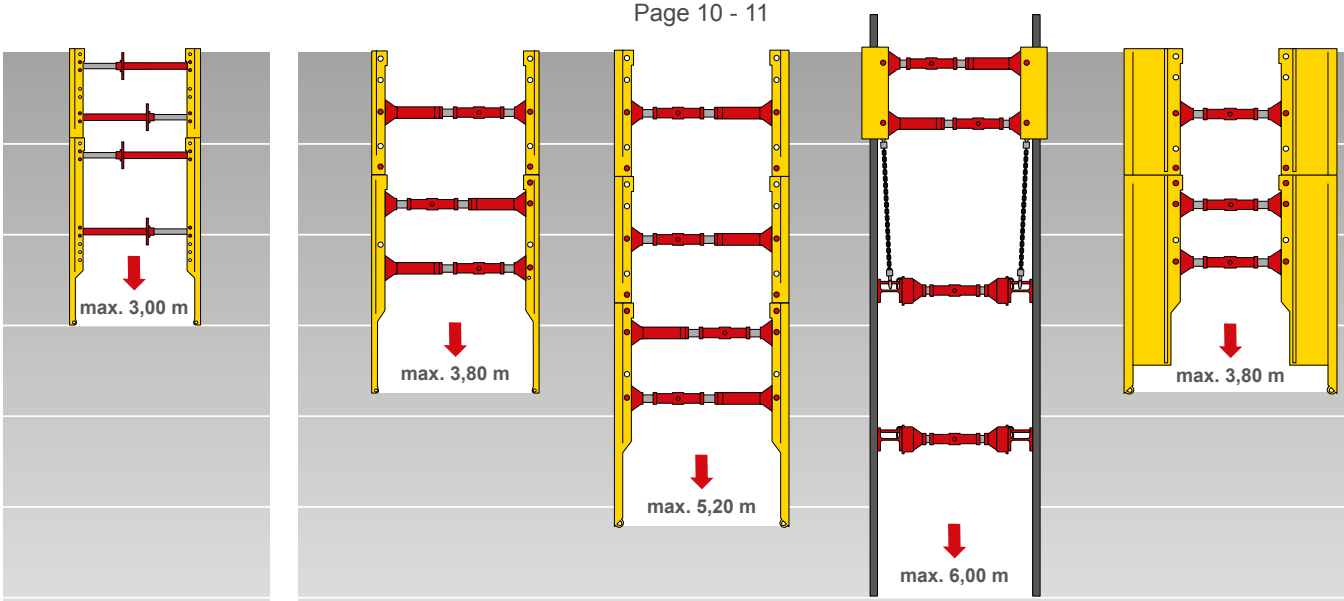

ROLLED STEEL SECTIONS

KD 400

KD 600

FLP 700

FLP 750

Single Slide Rail Shoring
Page 14 - 15

Double Slide Rail Shoring
Standard
Page 16 - 17

Double Slide Rail Shoring
XL
Page 18 - 19

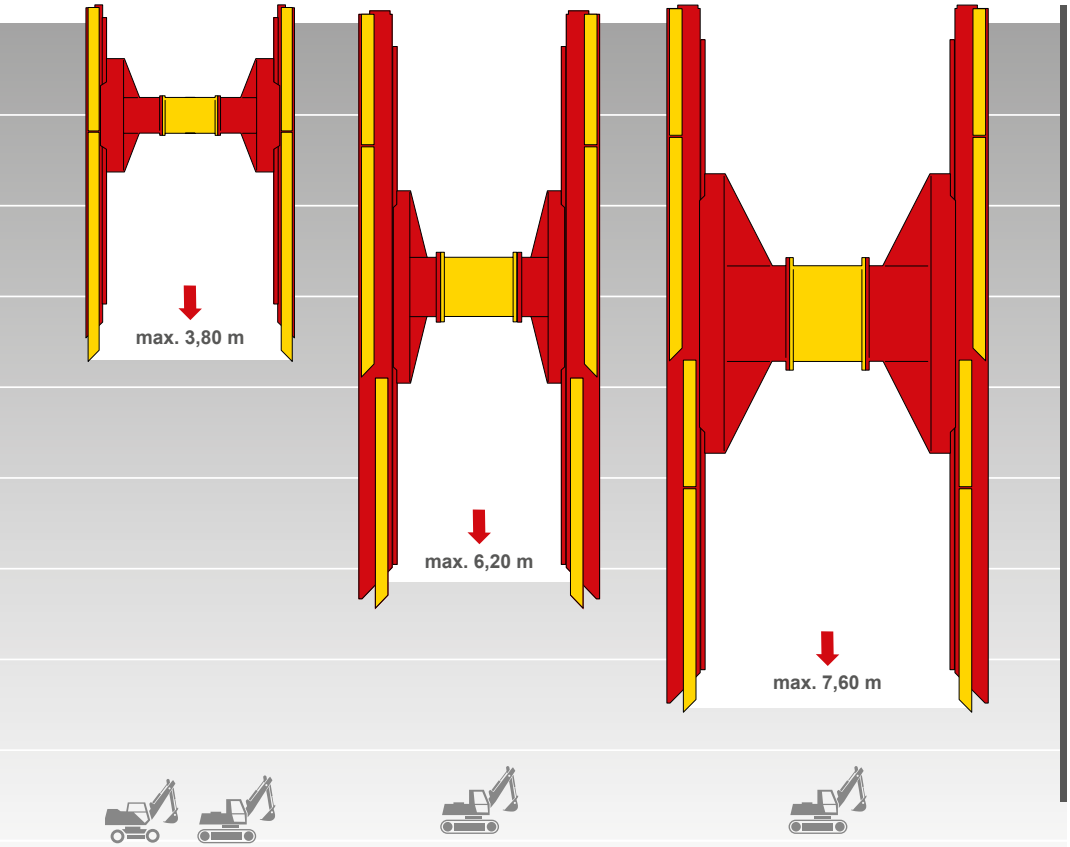

18 - 30 t

24 - 31 t

up to 6,2 m **24 - 31 t**

at depths from 6,2 m
30 - 50 t

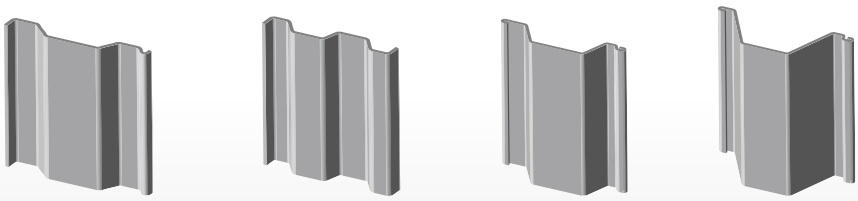

FURTHER CONTENT

Shaft and Manhole Shoring 20-21
Adjustable clamping device

Slide Rail Plates 22
Technical parameters

Trench Struts 23
ISCHEBECK
Gigant / Titan / Terra

Trench Shoring Profiles 24
Trench sheets
Sheet Piles

Supporting Equipment 25
Pipe grabs
Hydraulic pipe pullers

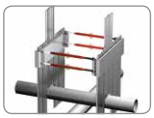

Aluminium
Light Weight Shoring 26
ISCHEBECK Gigant
Aluminium trench sheet

Certificates 27
Proven Quality - Certificates

▶ Trench Shoring Systems - Production

Since 2004 TWF was active as dealer of trench shoring equipment for customers in Austria and Germany but in 2012 we started to manufacture trench shoring systems in our own factory in Heinsberg.

Our service in the field of trench support equipment now includes production, sale and rental, consultating, in-house design of special customer-specific solutions, logistics, spare parts supply as well as training and after sale services.

We offer the complete range of products, from light to heavy trench shoring boxes, pile chambers, single and double slide rail slide rail shoring systems, pit and shaft shorings, trench sheets and sheet piles, trench struts and individual solutions for special excavation support projects.

▶ Heinsberg - Germany

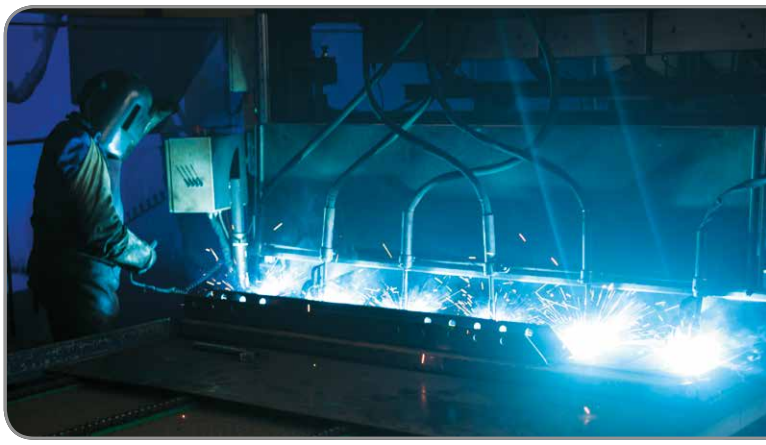

The **experience** of our motivated employees and the use of **high performance welding machines** ensure the excellent quality of production.

Our steel trench shoring are designed and built according to **latest international standards and safety regulations**. We know about the tough reality at side and therefore we reinforced our equipment where needed to extand the lifetime and reduce maintenace cost.

Light Weight Shoring Type 100

- For **small** to **medium-sized construction projects** (utilty lines, house connections etc.)
- Installation with **place and adjust method** in stable soils.
- Mobile excavator: **9 - 13 t**
- Maximum trench depth: **3,00 m**
- Trench width: **0,66 - 2,23 m**
- Pipe clearance height: **0,94 m**

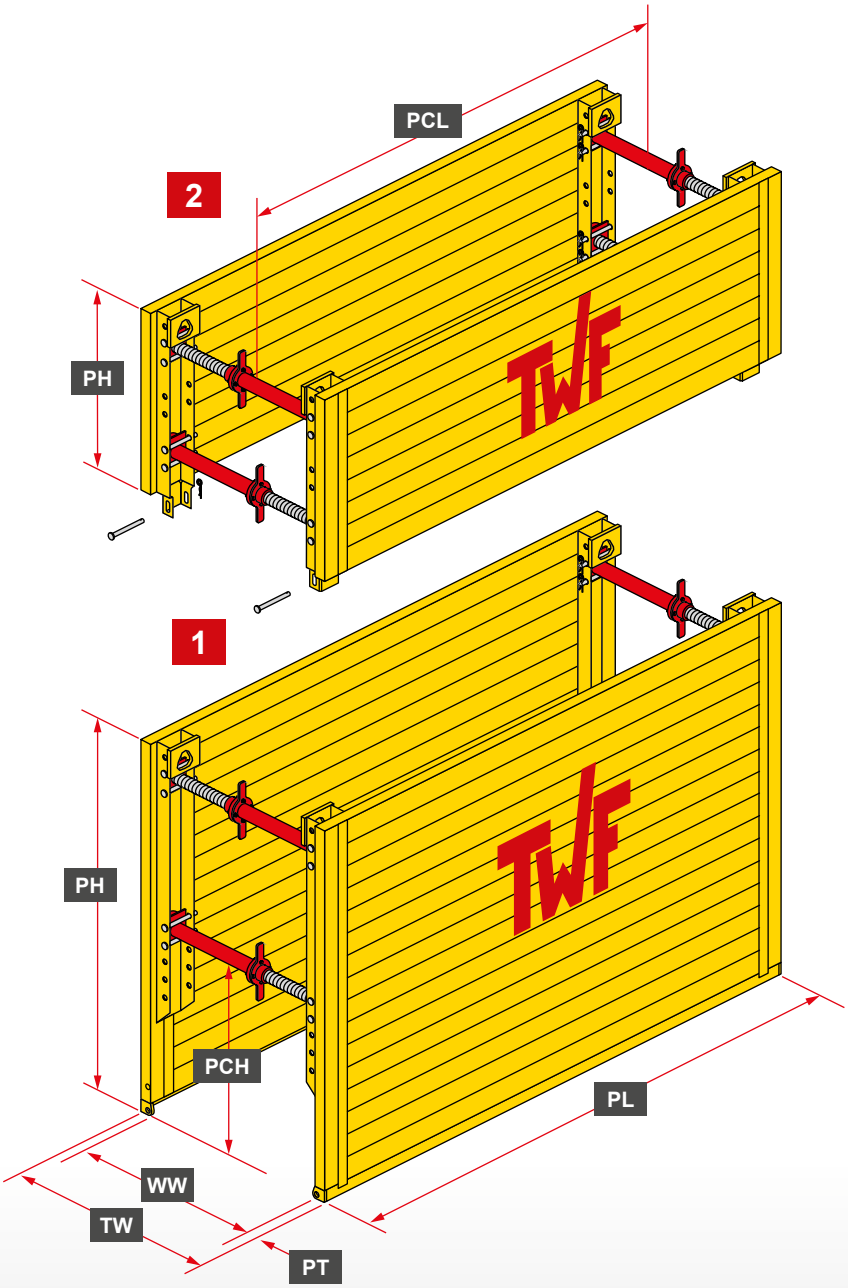

1	Base element
2	Top element
PH	Plate height
TW	Trench width
WW	Working width
PT	Plate thickness
PCH	Pipe clearance height
PL	Plate length
PCL	Pipe clearance length

► Light Weight Shoring Type 100

Element	Plate length PL (m)	Plate height PH (m)	Plate thickness PT (mm)	PC-length PCL (m)	PC-height PCH (m)	Char. System resistance R_k(kN/m²)	Weight c/w strut B (kg/box)
1	2,00	1,60 / 2,00 / 2,40 / 2,60	60	1,60	0,94	47,8	570 / 675 / 770 / 830
2		0,60 / 1,00					275 / 475
1	2,50	1,60 / 2,00 / 2,40 / 2,60	60	2,10	0,94	38,3	655 / 770 / 890 / 965
2		0,60 / 1,00					315 / 575
1	3,00	1,60 / 2,00 / 2,40 / 2,60	60	2,60	0,94	31,9	675 / 910 / 1100 / 1095
2		0,60 / 1,00					350 / 490
1	3,50	1,60 / 2,00 / 2,40 / 2,60	60	3,10	0,94	27,3	830 / 1060 / 1200 / 1230
2		0,60 / 1,00					355 / 490

Light Weight Spindle

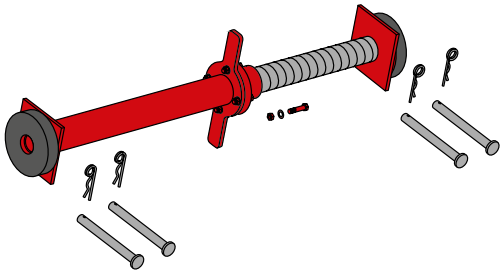

Type	Working width WW (m)		Trench width TW (m)		Safe working load (kN)	Weight complete (kg)
	min.	max.	min.	max.		
A	0,53	0,73	0,66	0,86	160	14,5
B	0,71	1,07	0,84	1,20	147	16,0
C	1,05	1,65	1,18	1,78	124	19,5
D	1,50	2,10	1,63	2,23	107	23,5

Telescopic Strut

► **Telescopic Strut** optional for Type 100
for working widths from 565 mm to 2450 mm

Light Box Shoring Type 300

- For **medium trench shoring** with light construction machinery.
- Installation by **lower and cut method** in unstable soils.
- Mobile- or crawler excavator: **12 - 18 t** | with top element **18 - 30 t**
- Maximum trench depth: **3,80 m**
- Trench width: **1,11 - 4,40 m**
- Pipe clearance height: **1,27 m**

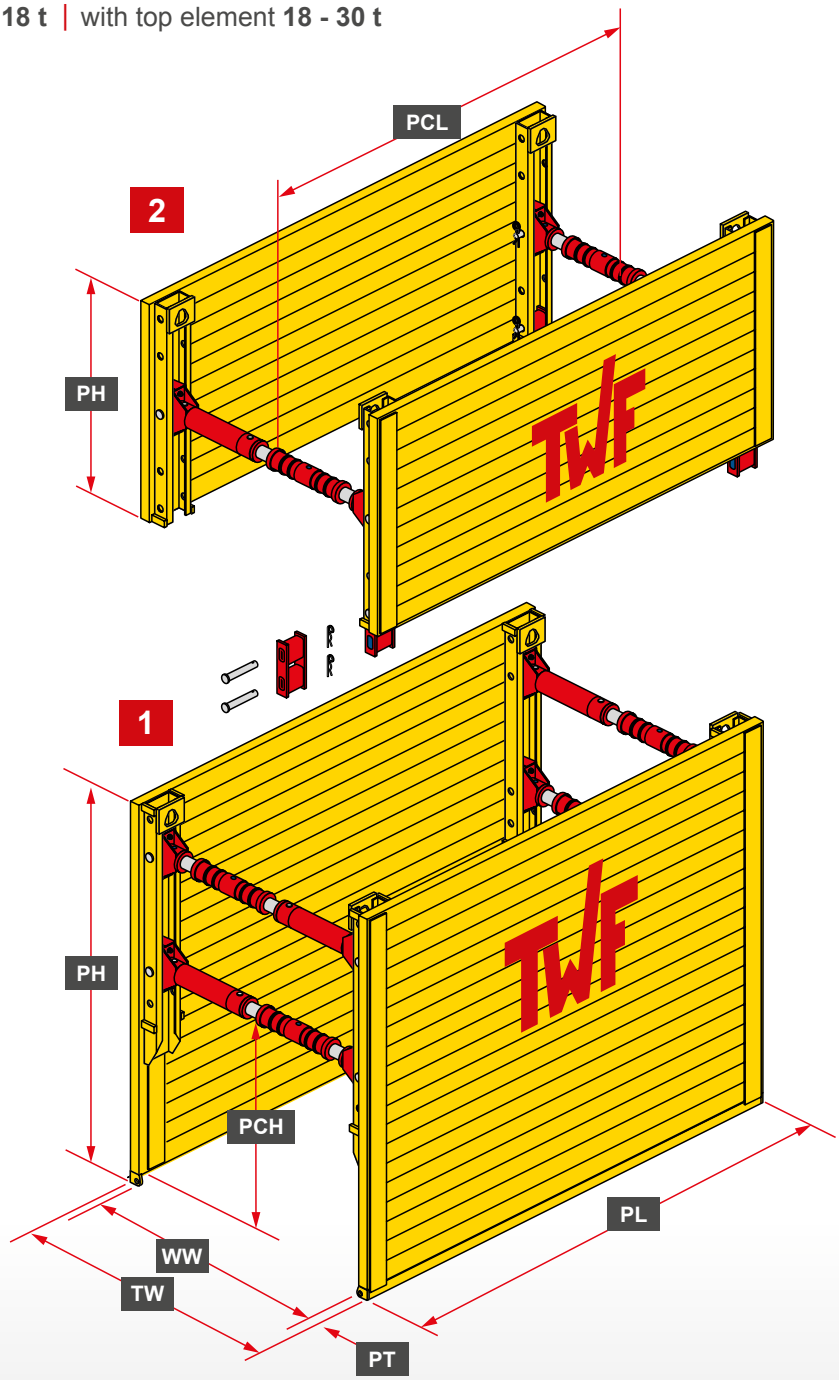

1	Base element
2	Top element
PH	Plate height
TW	Trench width
WW	Working width
PT	Plate thickness
PCH	Pipe clearance height
PL	Plate length
PCL	Pipe clearance length

▶ Light Box Shoring Type 300

Element	Plate length PL (m)	Plate height PH (m)	Plate thickness PT (mm)	PC-length PCL (m)	PC-height PCH (m)	Char. System resistance R_k(kN/m²)	Weight c/w spindle (kg/box)
1	2,00	2,00 / 2,40 / 2,60	60	1,60	1,12 / 1,27 / 1,27	68,0 / 49,3 *	920 / 1030 / 1105
2		1,40				68,0	591
1	2,50	2,00 / 2,40 / 2,60	60	2,10	1,12 / 1,27 / 1,27	54,4 / 39,4 *	1025 / 1150 / 1240
2		1,40				54,4	671
1	3,00	2,00 / 2,40 / 2,60	60	2,60	1,12 / 1,27 / 1,27	45,4 / 32,9 *	1121 / 1575 / 1862
2		1,40				45,4	911
1	3,50	2,00 / 2,40 / 2,60	60	3,10	1,12 / 1,27 / 1,27	34,2 / 28,2 *	1535 / 1750 / 1890
2		1,40				34,2	1021

* The Char. System resistance is based on the indicated PC-height.

Standard Spindle

Number intermediate pipe	Working width WW (m)	Trench width TW (m)	Safe working load (kN)	Weight complete (kg)
0	0,98 – 1,27	1,11 – 1,40	468	65
1	1,48 – 1,77	1,61 – 1,90	403	86
2	1,98 – 2,27	2,11 – 2,40	348	107
3	2,48 – 2,77	2,61 – 2,90	299	128
4	2,98 – 3,27	3,11 – 3,40	254	149
5	3,48 – 3,77	3,61 – 3,90	210	170
6	3,98 – 4,27	4,11 – 4,40	165	191

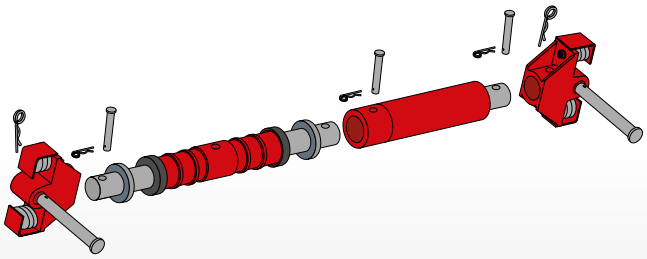

Standard Box Shoring Type 600

- **Solid** and **hard wearing** - ensures maximum safety at trench depths up to 4 m.
- Installation by **lower and cut method** in unstable soils.
- Mobile- or crawler excavator: **12 - 18 t** | with top element **18 - 30 t**
- Maximum trench depth: **5,20 m**
- Trench width: **1,20 - 4,48 m**
- Pipe clearance height: **1,50 m**

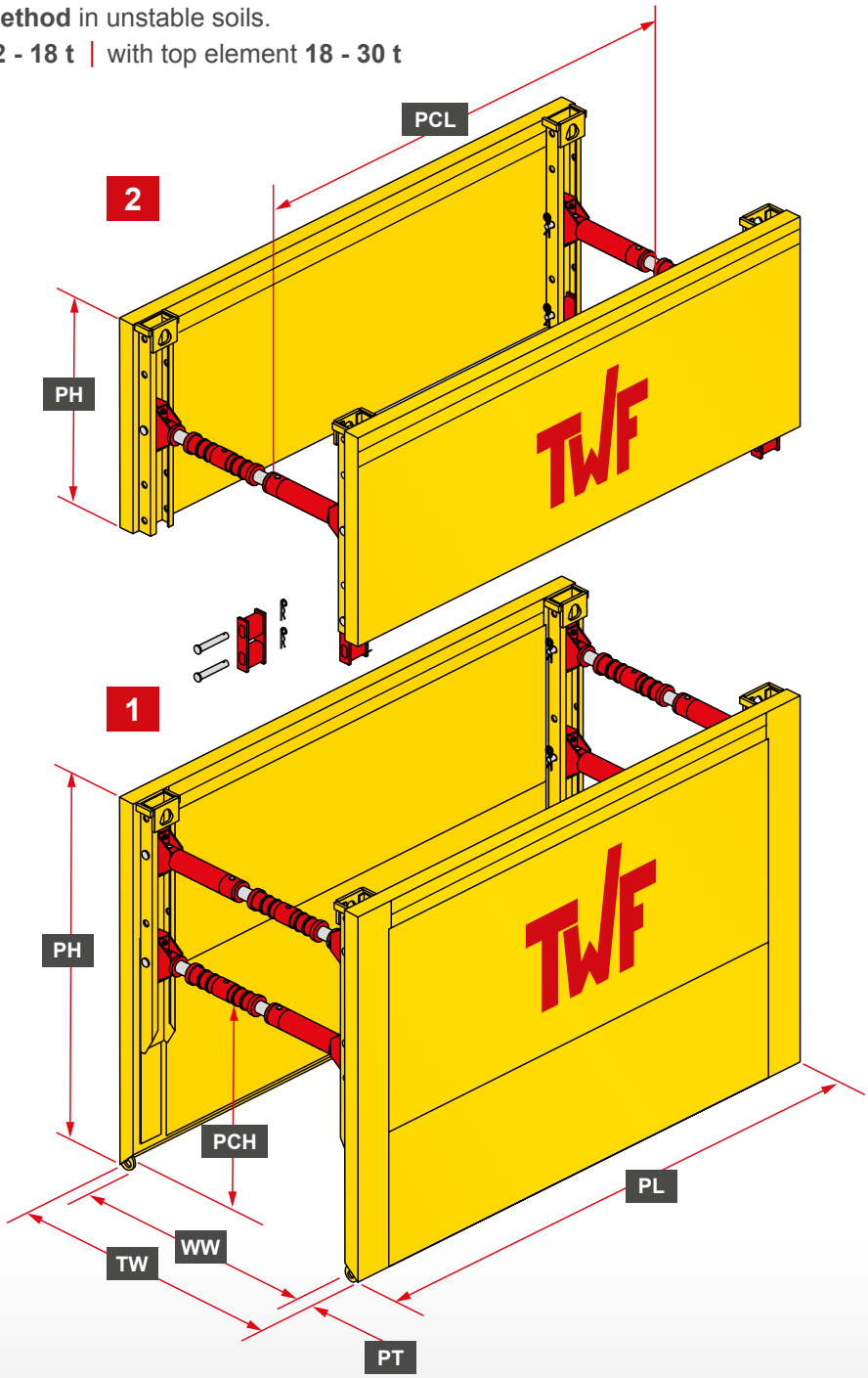

1	Base element
2	Top element
PH	Plate height
TW	Trench width
WW	Working width
PT	Plate thickness
PCH	Pipe clearance height
PL	Plate length
PCL	Pipe clearance length

► Standard Box Shoring Type 600

Element	Plate length PL (m)	Plate height PH (m)	Plate thickness PT (mm)	PC-length PCL (m)	PC-height PCH (m)	Char. System resistance R_k(kN/m²)	Weight c/w spindle (kg/box)
1	3,00	2,40 / 2,60	107	2,60	1,50 / 1,30	65,7 / 76,3 *	1950 / 2075
2		1,40					1160
1	3,50	2,40 / 2,60	107	3,10	1,50 / 1,30	56,3 / 65,4 *	2180 / 2320
2		1,40					1290
1	4,00	2,40 / 2,60	107	3,60	1,50 / 1,30	49,3 / 57,2 *	2400 / 2560
2		1,40					1510

* The char. system resistance is based on the indicated PC-height.

► **Other lengths on request!**

Standard Spindle

Number intermediate pipe	Working width WW (m)	Trench width TW (m)	Safe working load (kN)	Weight complete (kg)
0	0,98 – 1,26	1,20 – 1,48	468	65
1	1,48 – 1,76	1,70 – 1,98	403	86
2	1,98 – 2,26	2,20 – 2,48	348	107
3	2,48 – 2,76	2,70 – 2,98	299	128
4	2,98 – 3,26	3,20 – 3,48	254	149
5	3,48 – 3,76	3,70 – 3,98	210	170
6	3,98 – 4,26	4,20 – 4,48	165	191

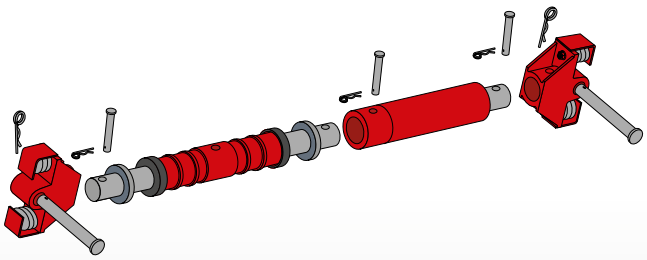

Pile Chamber Type 400

- Combined System (**plates** and **trench sheets**) applicable where **supply lines are crossing**. Also possible in combination with **slide rail shoring**.
- Installation by **lower and cut method** in unstable soils.
- Mobile excavator: **9 - 13 t**
- Maximum trench depth: **6,00 m**
- Trench width: **1,30 - 4,59 m**
- Pipe clearance height: **2,00 m**

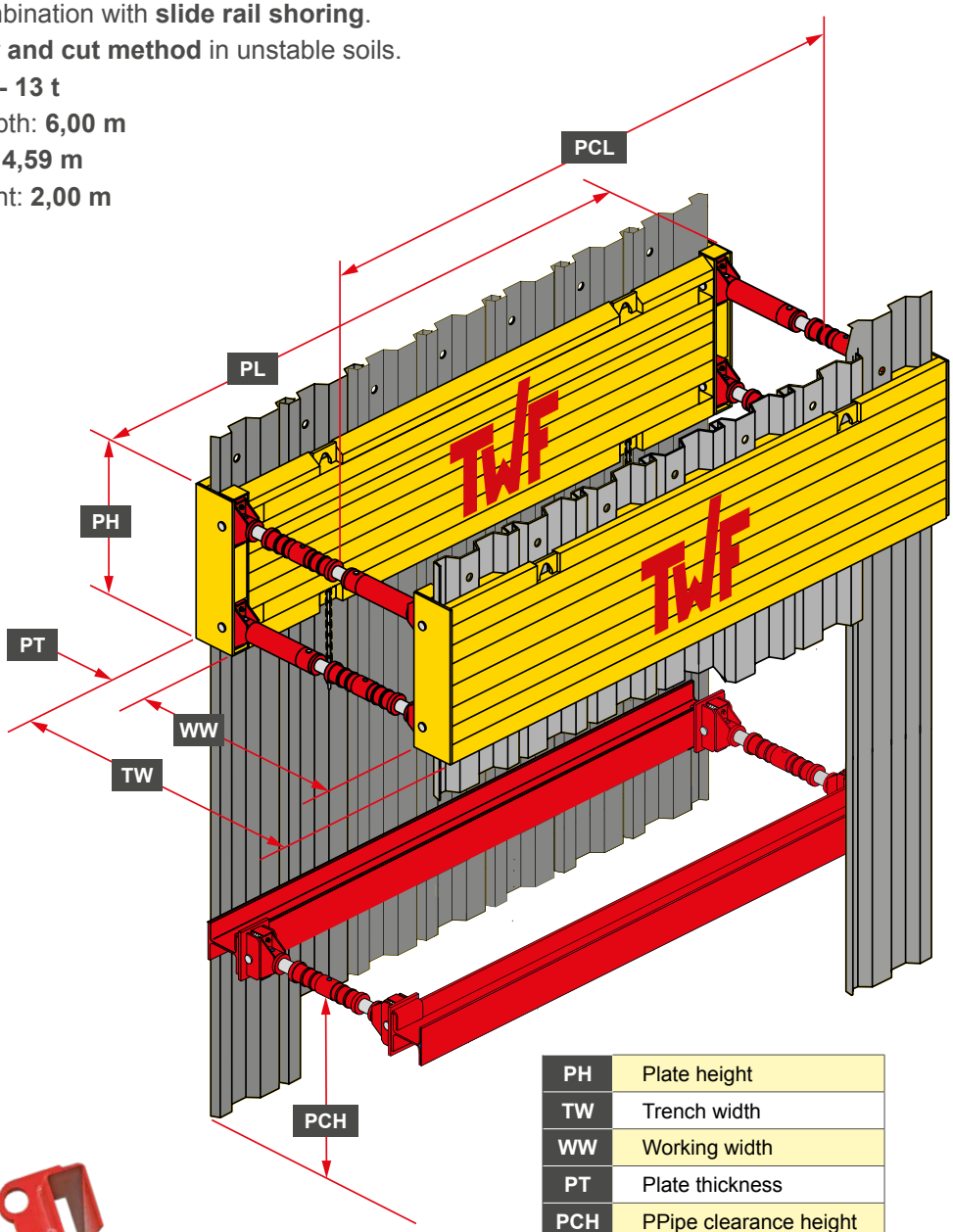

PH	Plate height
TW	Trench width
WW	Working width
PT	Plate thickness
PCH	PPipe clearance height
PL	Plate length
PCL	Pipe clearance length

▶ **End hooks for steel walings - special solution**

▶ Pile Chamber Type 400

Plate length PL (m)	Plate length with guide PH (m)	PC-length PCL (m)	Plate thickness total / inner plate PS (mm)	Quantity KD 600/8	Permissible beam load (kN/m)	Weight per panel without/with guide (kg)
2,84	2,94	2,56	265 / 120	5	116,6	660 / 695
3,92	4,02	3,64		7	61,2	875 / 910

▶ **Special lengths are available on request**
The thickness of inner plates is 170 mm (with a length of more than 4 metres)

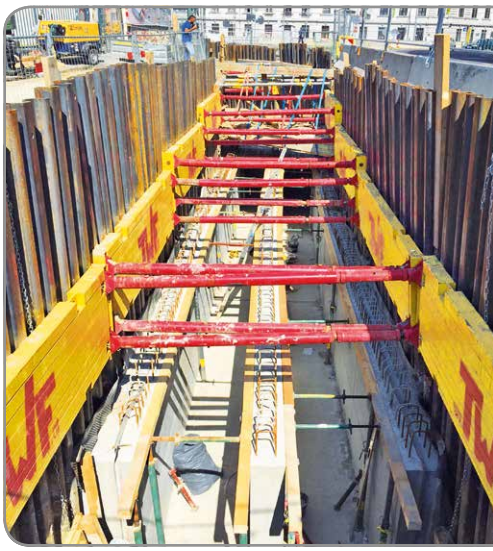

Standard Spindle

Number intermediate pipe	Working width WW (m)		Trench width TW (m)	Safe working load (kN)	Weight complete (kg)
	Trench sheets	Inner plates			
0	1,00 – 1,29	0,76 – 1,05	1,30 – 1,59	468	65
1	1,50 – 1,79	1,26 – 1,55	1,80 – 2,09	403	86
2	2,00 – 2,29	1,76 – 2,05	2,30 – 2,59	348	107
3	2,50 – 2,79	2,26 – 2,55	2,80 – 3,09	299	128
4	3,00 – 3,29	2,76 – 3,05	3,30 – 3,59	254	149
5	3,50 – 3,79	3,26 – 3,55	3,80 – 4,09	210	170
6	4,00 – 4,29	3,76 – 4,05	4,30 – 4,59	165	191

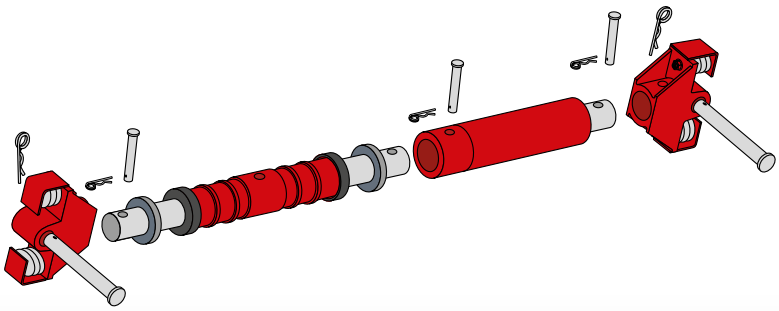

Single Slide Rail Shoring

- Usage at **high pipe clearances** - slide rail plates in **one guide rail** - rolling struts are movable - ensures the best possible use of the **working area.**
- Installation by **lower and cut method** in unstable soils.
- Mobile- or crawler excavator: **18 - 30 t**
- Maximum trench depth: **3,80 m**
- Trench width: **1,68 - 6,68 m**
- Pipe clearance height: **2,46 m**

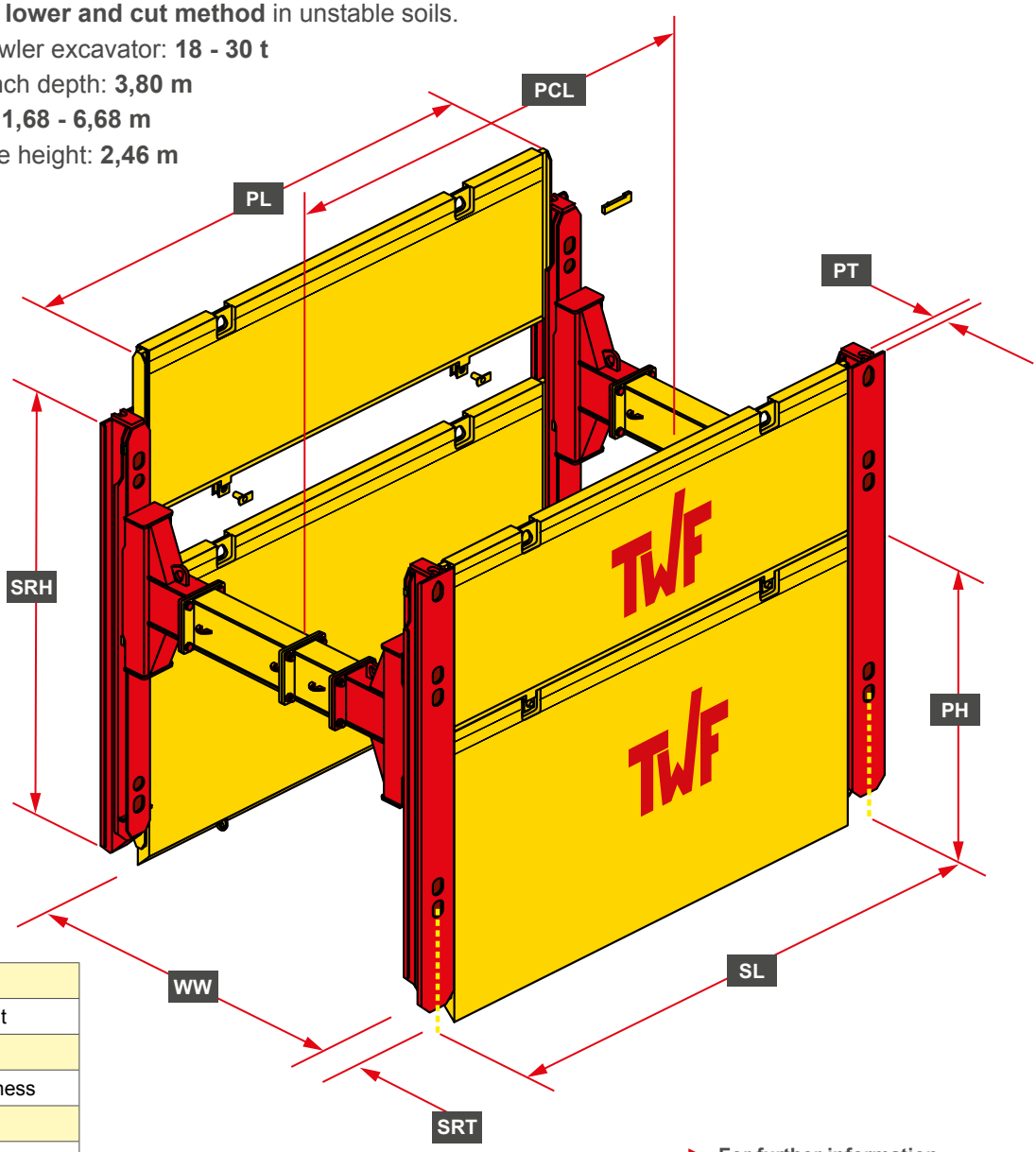

PL	Plate length
SRH	Slide rail height
WW	Working width
SRT	Slide rail thickness
SL	System length
PH	Plate height
PT	Plate thickness
PCL	Pipe clearance length

▶ For further information about slide rail plates see page 22

Single Slide Rail Shoring

Element	Slide rail height SRH (m)	Weight (kg)	Slide rail thickness SRT (mm)	Char. System resistance
Slide rail	3,50	540	220	460,0 kNm
Corner rail		390	275	130,9* kN/m

* Slide rail force each side

Rolling Strut

RSH	Rolling Strut height
RSW	Rolling Strut width
DPL	Distance piece length
FH	Flange height
FW	Flange width

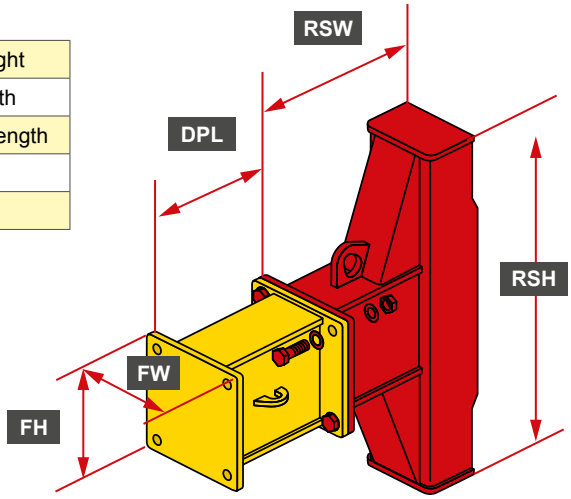

Rolling Strut	
Height RSH (m)	1,24
Width RSW (m)	0,62
Flange width FW (mm)	405
Flange height FH (mm)	420
Weight / RS-pair (kg)	620
min. Working width WW (m)	1,24

Distance piece						
Lenght DPL (m)	0,25	0,50	0,75	1,00	2,00	3,00
Weight (kg)	99	128	157	185	303	421

Double Slide Rail Shoring Standard

- Slide rail plates in **two guide rails** - for **flexible use** in **several fields.**
- Installation by **lower and cut method** in unstable soils - **easy dismantling.**
- Crawler excavator: **24 - 31 t**
- Maximum trench depth: **6,20 m**
- Trench width: **1,99 - 8,99 m**
- Pipe clearance height: **2,95 m**

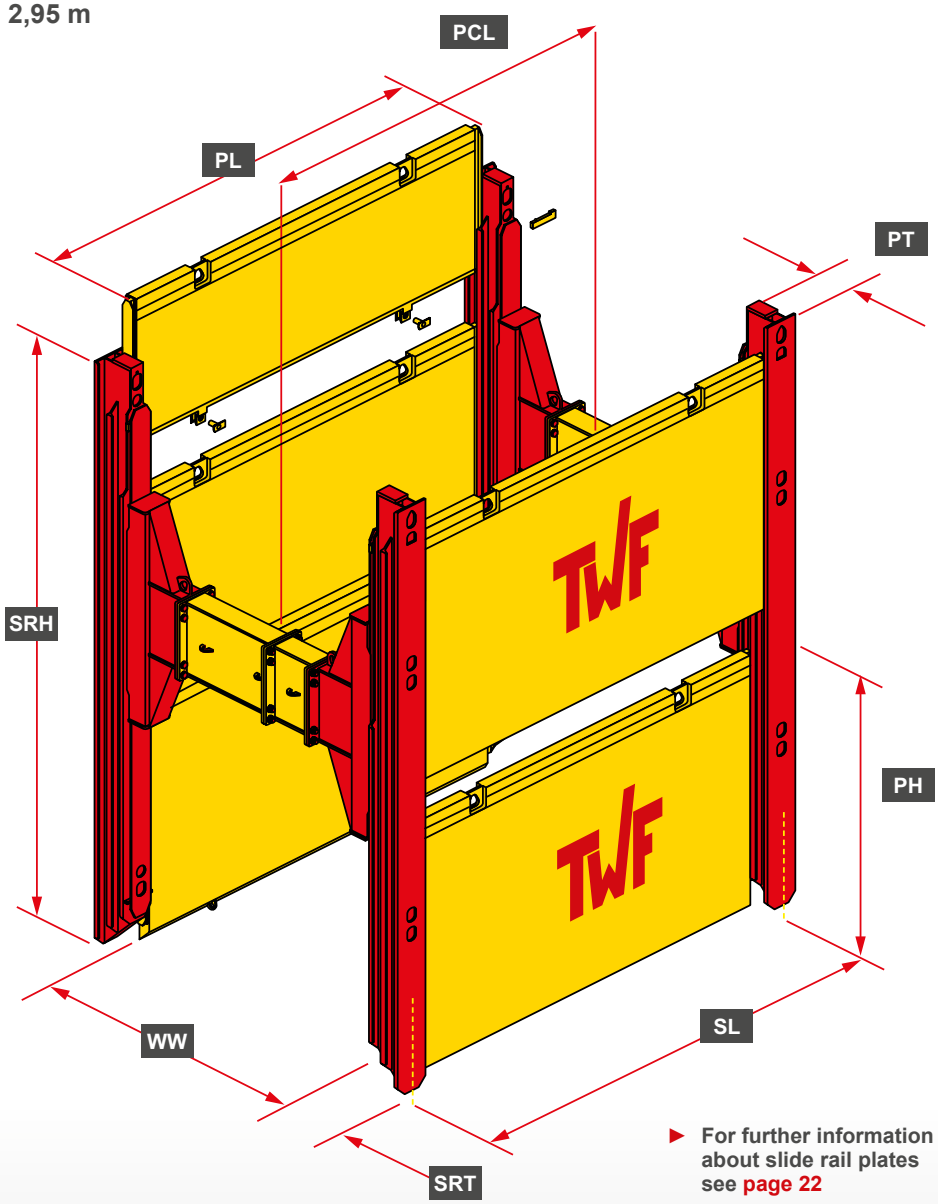

PL	Plate length
SRH	Slide rail height
WW	Working width
SRT	Slide rail thickness
SL	System length
PH	Plate height
PT	Plate thickness
PCL	Pipe clearance length

▶ For further information about slide rail plates see page 22

Double Slide Rail Shoring

Element	Slide rail height SRH (m)	Weight (kg)	Slide rail thickness SRT (mm)	Char. System resistance
Slide rail	4,50	960	375	949,2 kNm
	5,50	1164		
	6.00	1266		
	6,50	1368		
Corner rail	4,50	810	430	130,9* kN/m
	5,50	957		

* Slide rail force each side

Rolling Strut Standard

RSH	Rolling Strut height
RSW	Rolling Strut width
DPL	Distance piece length
FH	Flange height
FW	Flange width

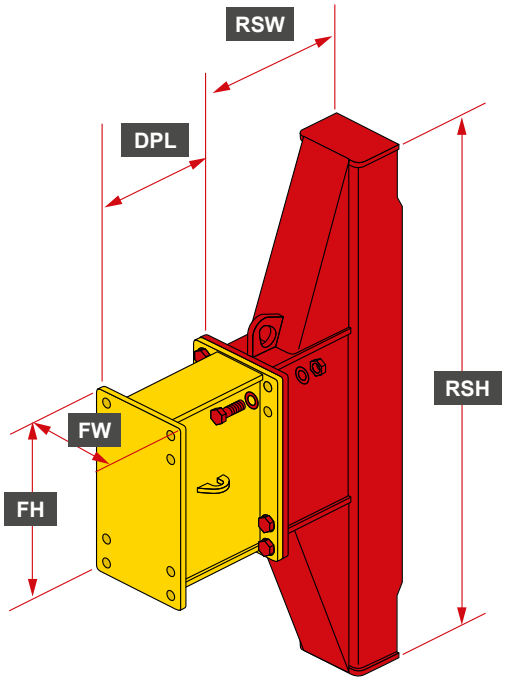

Rolling Strut - Standard	
Height RSH (m)	2,04
Width RSW (m)	0,50* 0,62
Flange width FW (mm)	405
Flange height FH (mm)	720
Weight / RS-pair (kg)	980
min. Working width WW (m)	1,24

*Special width on request

Distance piece - Standard						
Lenght DPL (m)	0,25	0,50	0,75	1,00	2,00	3,00
Weight (kg)	163	202	245	277	437	597

Double Slide Rail Shoring XL

- Slide rail plates in **two guide rails** - for **flexible use** in **several fields.**
- Installation by **lower and cut method** in unstable soils - **easy dismantling.**
- Crawler excavator at depths up to 6,2 m: **24 - 31 t** | at depths from 6,2 m: **30 - 50 t**
- Maximum trench depth: **7,60 m**
- Trench width: **1,99 - 8,99 m**
- Pipe clearance height: **3,95 m**

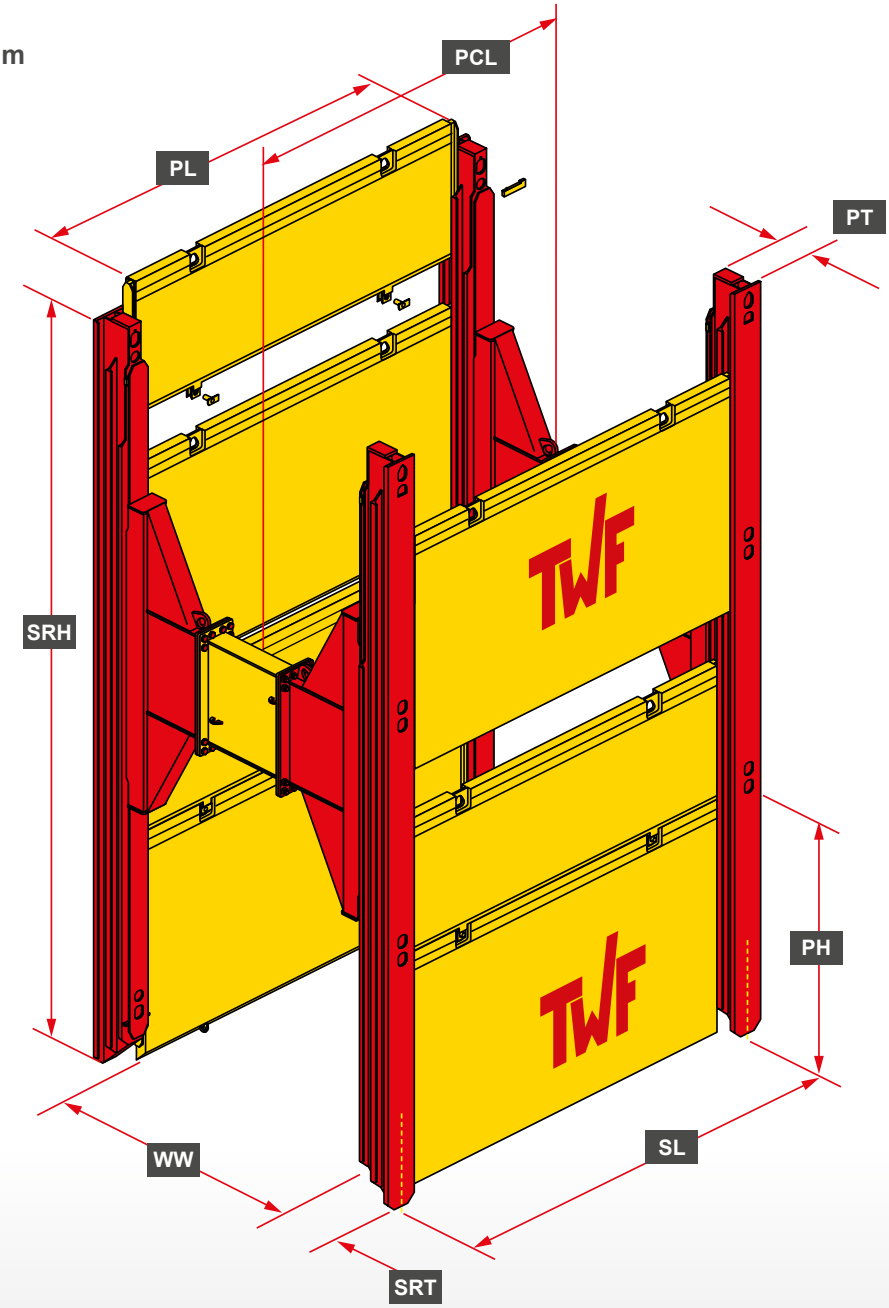

PL	Plate length
SRH	Slide rail height
WW	Working width
SRT	Slide rail thickness
SL	System length
PH	Plate height
PT	Plate thickness
PCL	Pipe clearance length

▶ For further information about slide rail plates see page 22

Double Slide Rail Shoring

Element	Slide rail height SRH (m)	Weight (kg)	Slide rail thickness SRT (mm)	Char. System resistance
Slide rail	6,50	1383	405	949,2 kNm
	7,50	1645		
Corner rail	6,50	1130	430	130,9* kN/m
	7,50	1338		

* Slide rail force each side

Rolling Strut XL

RSH	Rolling Strut height
RSW	Rolling Strut width
DPL	Distance piece length
FH	Flange height
FW	Flange width

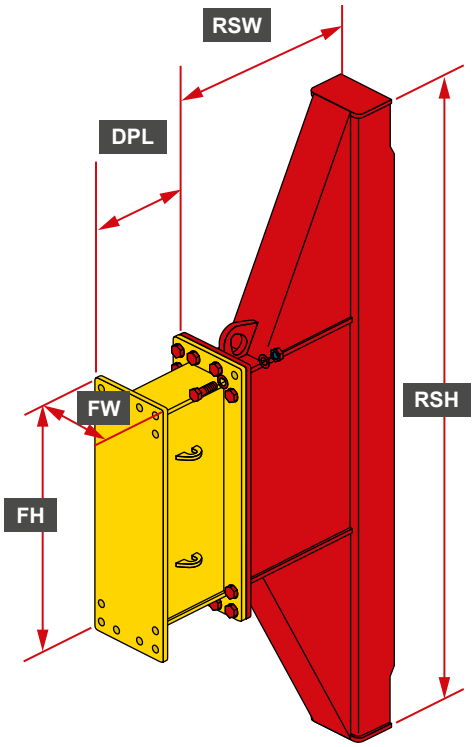

Rolling Strut - XL	
Height RSH (m)	3,04
Width RSW (m)	0,92
Flange width FW (mm)	405
Flange height FH (mm)	1220
Weight / RS-pair (kg)	1700
min. Working width WW (m)	1,83

Distance piece - XL						
Lenght DPL (m)	0,25	0,50	0,75	1,00	2,00	3,00
Weight (kg)	306	363	418	475	714	960

Shaft and Manhole Shoring

Working width

from 2,0 x 2,0 m up to 7,0 x 7,0 m
without struts.

Further information on request!

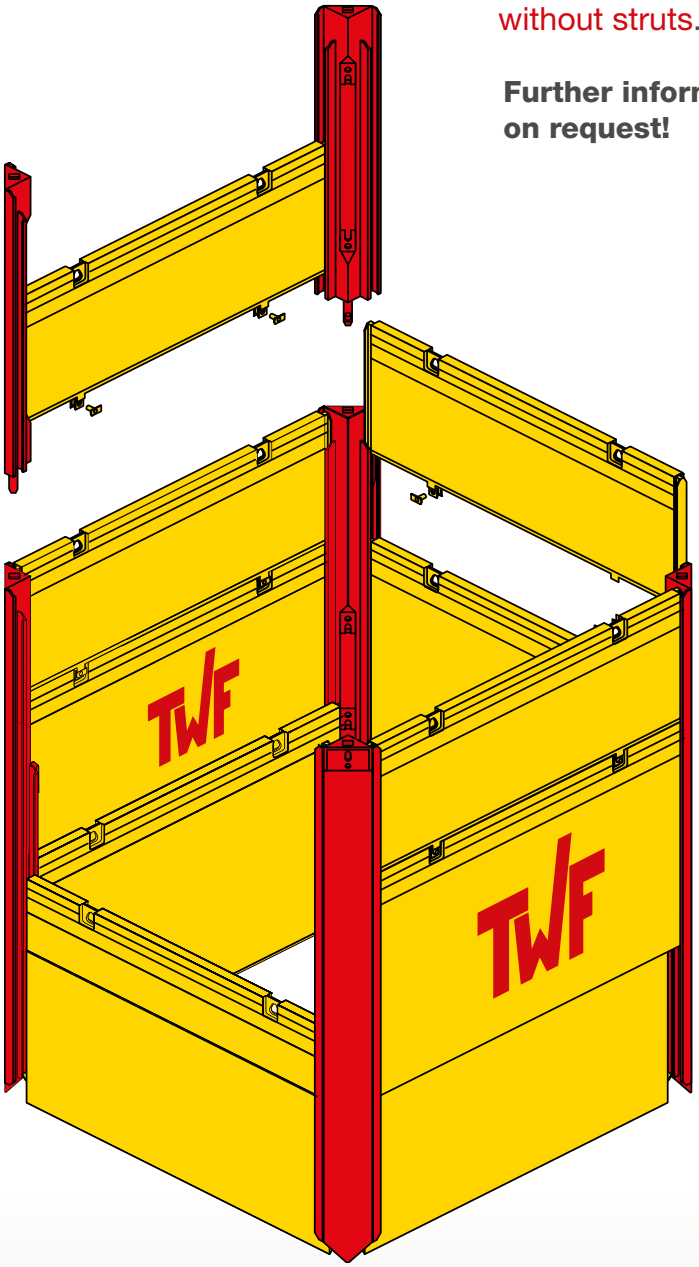

Adjustable clamping device

Large excavations require the use of an **adjustable clamping device** so that they can be built without struts.

Further information on request!

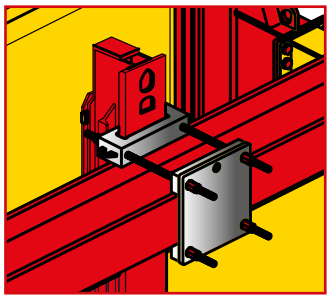

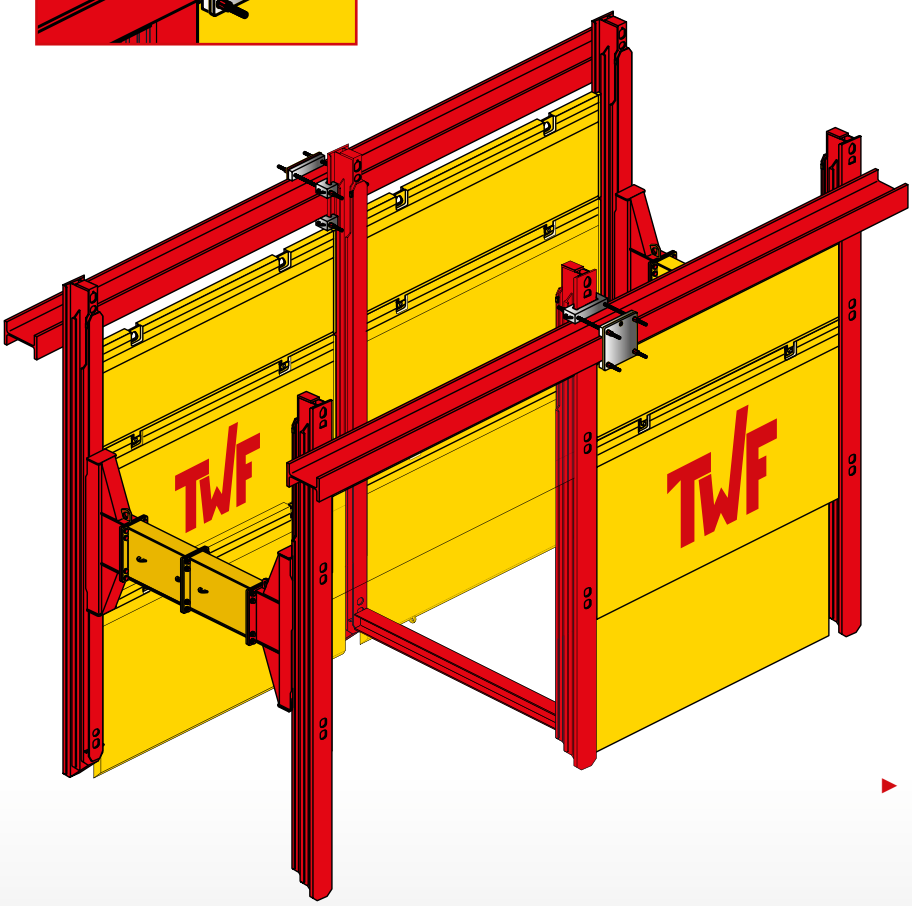

For further information about slide rail plates see page 22

Slide Rail Plates

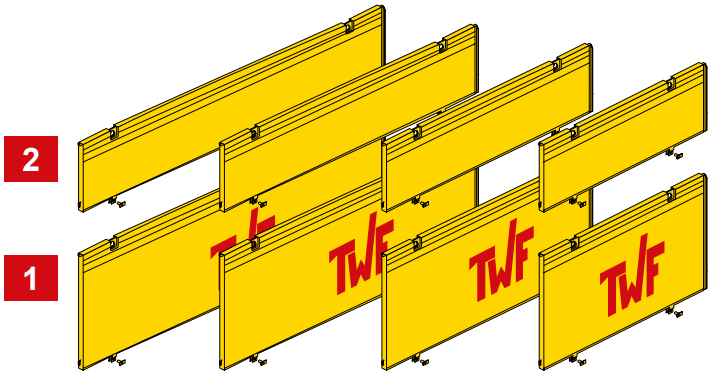

1	Base Plate
2	Top Plate
PL	Plate length
PH	Plate height
PT	Plate thickness
PCL	Pipe clearance length
SL	System length

	Plate length PL (m)	Plate height PH (m)	Plate thickness PT (mm)	PC-length PCL (m)	System length (m)	Char. System resistance R_k(kN/m²)	Weight (kg)
1	2,00	2,40	107	1,80	2,27	220,2	550
2		1,40					355
1	2,50	2,40	107	2,30	2,77	141,2	675
2		1,40					420
1	3,00	2,40	107	2,80	3,27	97,9	770
2		1,40					495
1	3,50	2,40	107	3,30	3,77	72,0	970
2		1,40					604
1	4,00	2,40	107	3,80	4,27	55,1	1010
2		1,40					650
1	4,50	2,40	130	4,30	4,77	78,5	1472
2		1,40					999
1	5,00	2,40	130	4,80	5,27	63,6	1636
2		1,40					1110
1	5,50	2,40	130	5,30	5,77	52,6	1894
2		1,40					1221
1	6,00	2,40	130	5,80	6,27	44,1	2150
2		1,40					1332
1	6,50	2,40	150	6,30	6,77	45,0	2405
2		1,40					1443
1	7,00	2,40	150	6,80	7,27	38,8	2660
2		1,40					1554

▶ Plates for HEAVY DUTY on request

Trench Struts

ISCHEBECK®

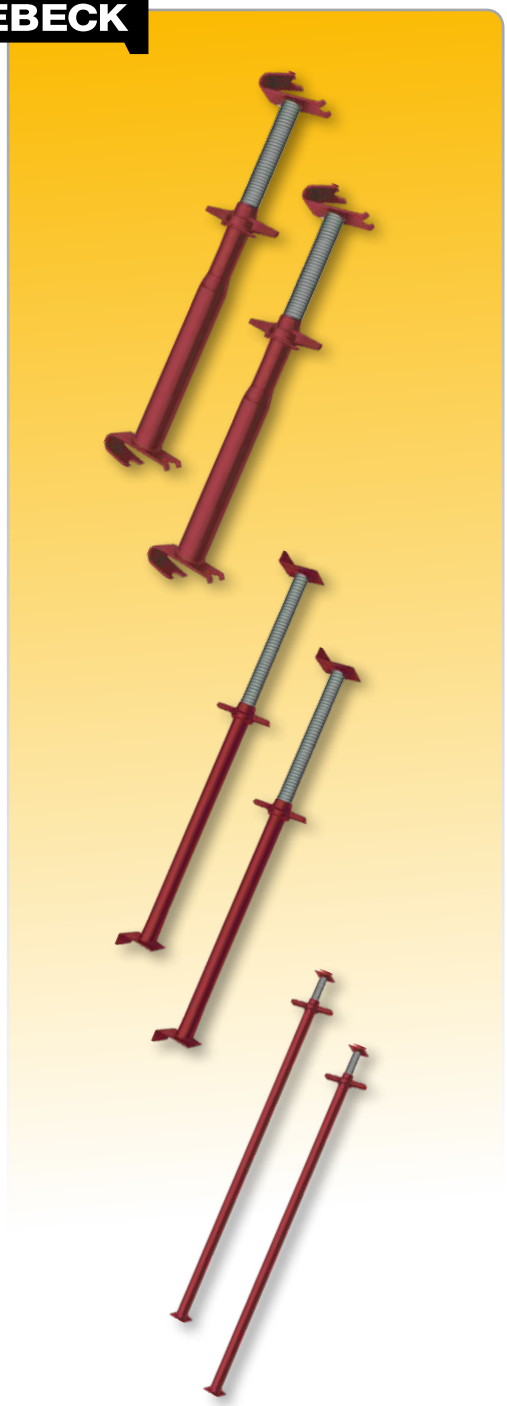

Type	Adjustment	Safe working load	Weight
GIGANT with hook-type angle from HEB 140 - 300 mm			
Gi-S 120	0,70 - 1,20 m	210,0 - 177,3 kN	26 kg
Gi-S 170	1,05 - 1,70 m	210,0 - 177,3 kN	32 kg
Gi-S 210	1,40 - 2,10 m	184,4 - 156,1 kN	36 kg
Gi-S 260	1,90 - 2,60 m	176,3 - 139,7 kN	40 kg
Gi-S 310	2,40 - 3,10 m	156,8 - 138,1 kN	45 kg
Gi-SV 210	1,40 - 2,10 m	548,0 - 290,0 kN	69 kg
Gi-SV 260	1,90 - 2,60 m	471,0 - 260,0 kN	81 kg
Gi-SV 310	2,40 - 3,10 m	424,0 - 270,0 kN	92 kg
Gi-SV 380	3,10 - 3,80 m	390,0 - 258,0 kN	107 kg
Gi-SV 450	3,80 - 4,50 m	344,0 - 262,0 kN	122 kg

Type	Adjustment	Safe working load	Weight
TITAN with support angle for 140/160 mm			
Titan 48/120	0,70 - 1,17 m	63 - 48 kN	9 kg
Titan 48/150	0,90 - 1,50 m	61 - 45 kN	10 kg
Titan 48/210	1,20 - 2,10 m	60 - 38 kN	13 kg
Titan 60/150	0,90 - 1,50 m	100 - 99 kN	17 kg
Titan 60/200	1,40 - 2,00 m	100 - 93 kN	19 kg
Titan 60/250	1,90 - 2,50 m	95 - 84 kN	22 kg
Titan 60/300	2,40 - 3,00 m	85 - 72 kN	25 kg

Type	Adjustment	Safe working load	Weight
TERRA with claw plate and nail hole			
Terra 1	0,50 - 0,80 m	38 - 30 kN	3,60 kg
Terra 1a	0,60 - 0,90 m	36 - 29 kN	3,90 kg
Terra 2	0,80 - 1,10 m	34 - 29 kN	4,50 kg
Terra 3	1,10 - 1,40 m	29 - 23 kN	5,40 kg
Terra 4	1,40 - 1,70 m	26 - 22 kN	6,40 kg

Trench Sheets
Sheet Piles

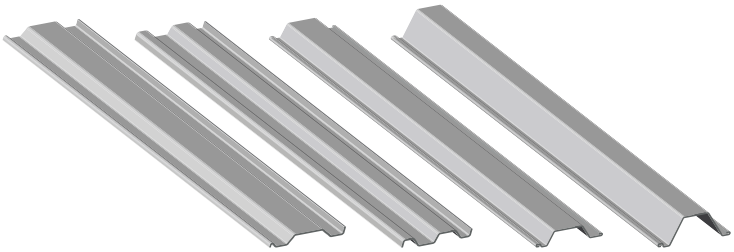

Type	Width (mm)	Section modulus (cm^3/m)	Weight (kg/lfm)	Weight (kg/m^2)
KD 400 / 6	400	98,75	22,23	55,57
KD 600 / 8	600	237	50,0	83,33
FLP 700 / 8	700	540	61,9	88,45
FLP 750 / 8	750	1.044	76,61	102,0

Our product range covers **trench sheets** and **sheet piles** for all your needs in various sizes and shapes.

Hydraulic Pipe pullers
Pipe Grabs

For safe **lifting** and **lowering** or for pulling together, reinforced concrete pipes **pipe grabs** and **hydraulic pipe pullers** are a great help.

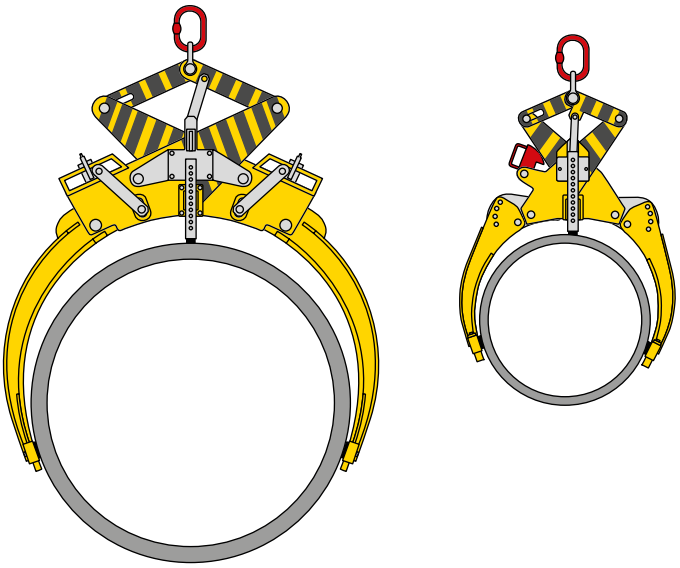

For detailed information about **pipe grabs** and **hydraulic pipe pullers**, we are always at your service.

Please call **+43 1 865 33 33**
or contact us via e-mail. **office@twf.at**

Aluminium Light Weight Shoring

▶ Aluminium-Light Weight Shoring GIGANT

System-based, efficient solutions.

▶ on request

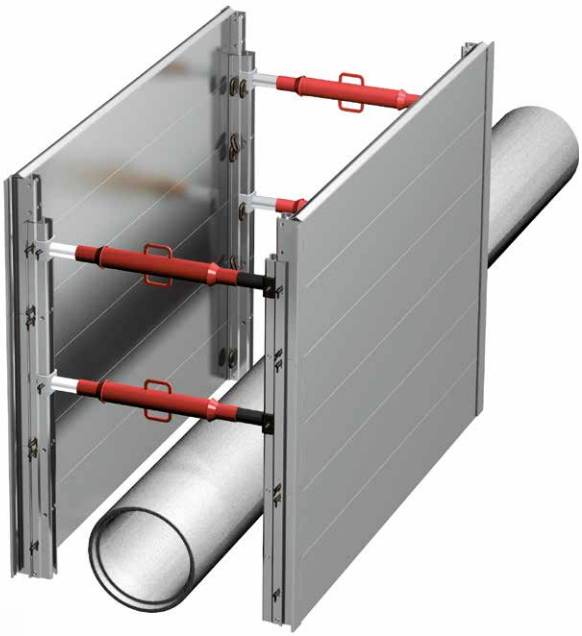

ISCHEBECK GIGANT®

The **Aluminium Light Weight Shoring System GIGANT** is the ideal solution for trenches up to 6 m depth and preferred for congested, urban applications where only smaler excavators can be used.
This modular system closes the gap between timber shoring and the heavier steel trench boxes.
A wide range of trench widths and depths as well as existing underground utility lines can be handled safely and economically.

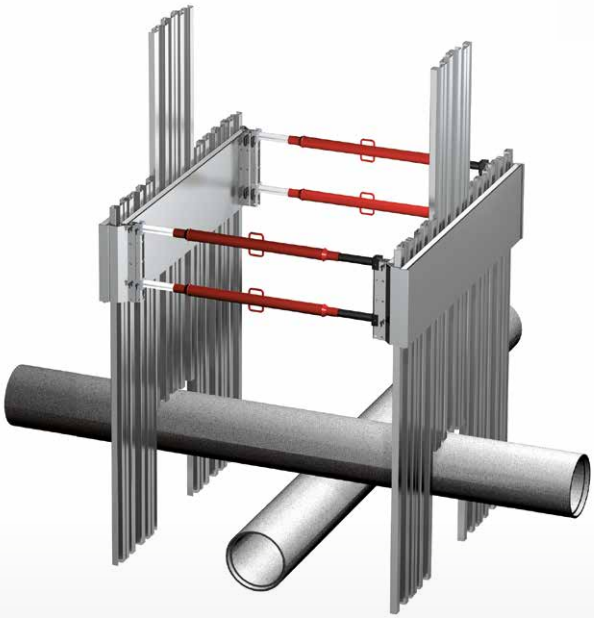

▶ The Aluminium trench sheet

complements the Aluminium Light Weight Shoring System GIGANT.

- Easy to handle
- Variable pipe clearance height
- Quick and safe - proven and tested method

▶ Proven Quality - Certificates

www.tuv.com
ID 9105073605

CERTIFICATE
Factory production control
0035-CPR.1090-1.00875.TÜVRh.2015.002

Welding CERTIFICATE
TÜVRh-EN1090-2.00806.2015.002
EN 1090-1, welding of steel and other metal constructions requires special expertise and manufacturer qualification – DIN EN 1090-2

CERTIFICATE
DIN 4124
DIN EN 13331

CERTIFICATE
Seal of approval
“Safe with System” and certification according

OHSAS 18001:2007.

CERTIFICATE
Quality Management Specialist

DIN EN ISO/IEC 17024.

TWF TIEFBAUTECHNIK

Sales | Rental | Leasing

TWF Baumaschinentechnik GmbH
Klingerstrasse 8, 1230 Vienna, AUSTRIA
T: +43 (0) 1 / 865 33 33
F: +43 (0) 1 / 865 33 33 - 33
office@twf.at
www.twf.at

TWF Tiefbautechnik GmbH
Ferdinand-Porsche-Strasse 12, 52525 Heinsberg, GERMANY
T: +49 (0) 2452 / 9774 53
F: +49 (0) 2452 / 9774 65
office@twf-tiefbautechnik.de
www.twf-tiefbautechnik.de

TRENCH SHORING SYSTEMS